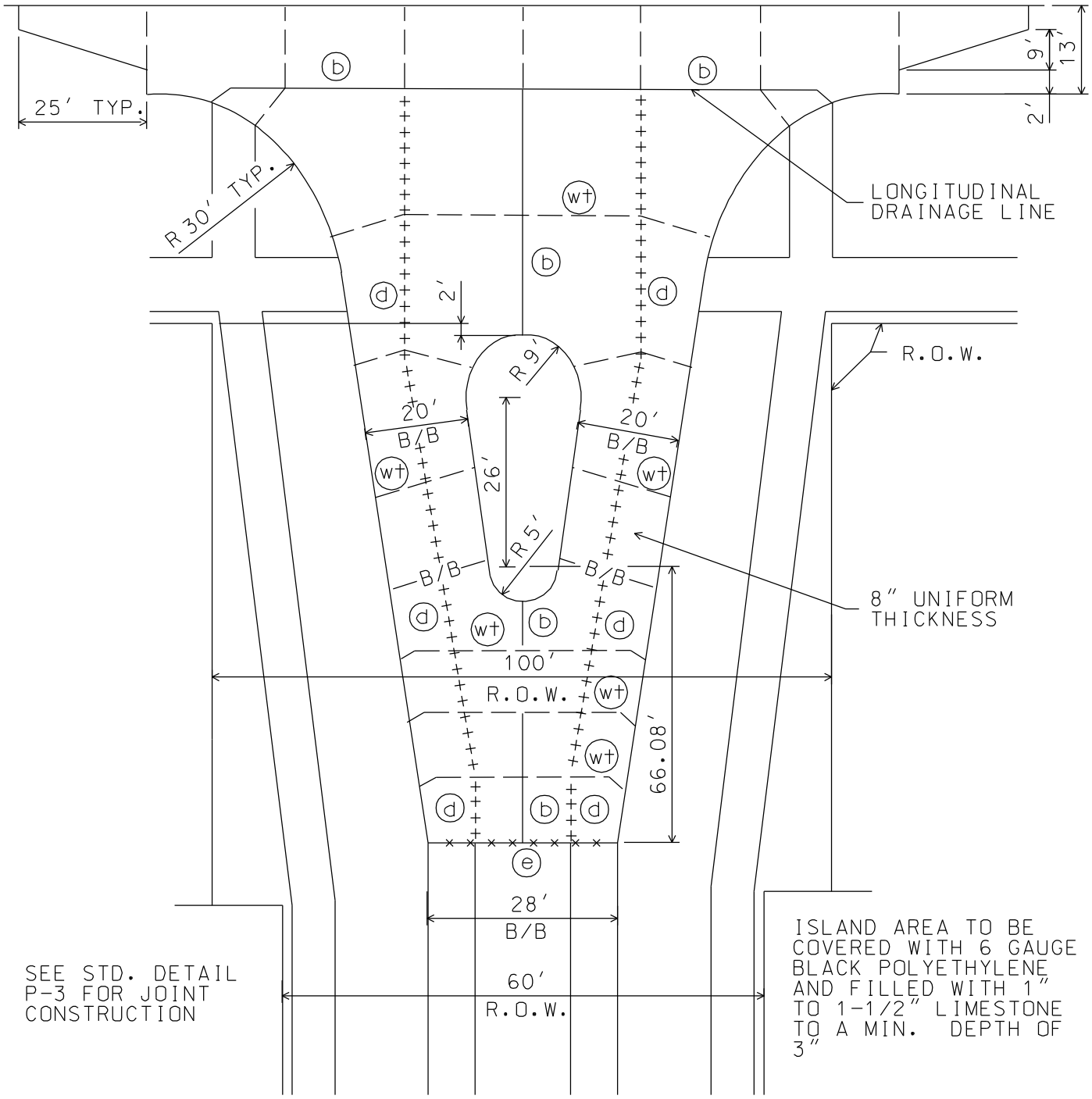

P	P			
O	O			
N	N			
M	M			
L	L			
K	K			
J	J			
I	I			
H	H			
G	G			
F	F			
E	E			
D	D			
C	C			
B	B			
A	A			
DESCRIPTION		DRW	CHK	DATE

REVISIONS

CITY OF SOUTHFIELD STANDARD DETAIL

100' WIDE ENTRANCE STREET WITH A MAJOR THOROUGHFARE

ISSUE: 2000	SD#: P - 12
SHEET:	SCALE: N.T.S.